7FBE

ELECTRIC POWERED FORKLIFT

1.0 to 2.0 ton SERIES

TOYOTA

SAS

WORLD LEADER

AC Power System

World Class Productivity

Toyota has added an array of features to its popular 3-wheeler. Now it ranks among the most productive forklifts in the world today. At the very heart of these advancements are the Total AC Control provided by the advanced *AC Power System* and the Total Comfort offered by the *System of Active Stability (SAS).*

Features and equipment
may vary depending on market.

SAS
WORLD LEADER

AC Power System

Total AC Control

The New Toyota 7FBE Three-Wheeler is proud to offer total AC control of its top-ranked performance.

Full AC Power System*

The state-of-the-art system is the foundation for many of the enhanced benefits of the New 7FBE.
Toyota overcame numerous technical obstacles to realize this AC Power System, but the result was well worth the challenge.
The level of performance control it provides is unlike anything else you have ever experienced.
Once again, Toyota has set the standard for all other manufacturers to follow.

* Power management of the twin drive motors and the pump motor for load handling and power steering is performed by full AC control.
This AC Power System requires less maintenance cost than the current DC system.

Features and equipment may vary depending on market.

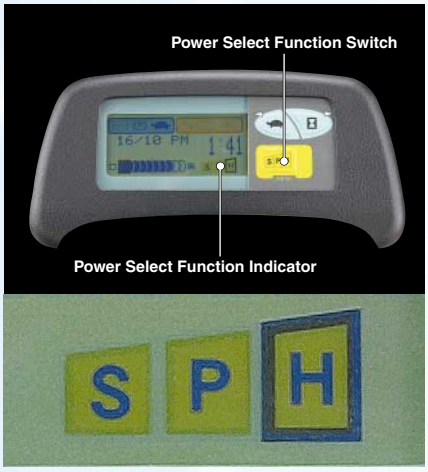

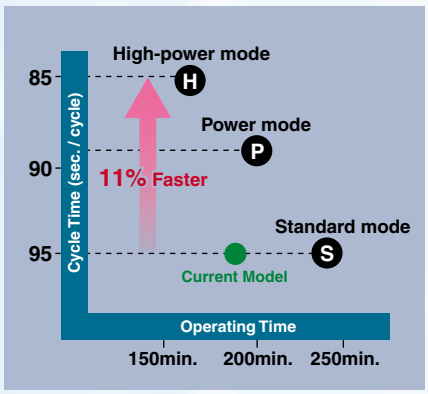

Power Select Function

This function allows the operator to set the power mode that best meets the demands of the job. The S-Mode places priority on extending the operating time per charge. The H-Mode is for the fastest cycle time. In the H-Mode, the 7FBE will deliver an 11% faster cycle time than the current model.

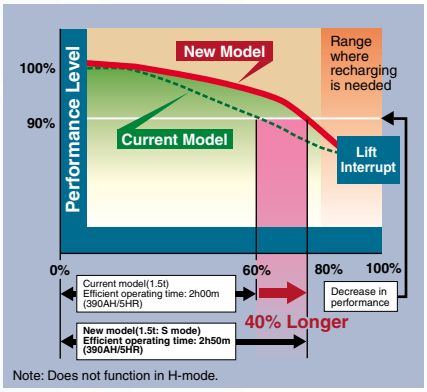

Power Keep Function

The power control offered by the AC Power System allows the 7FBE to fully use the potential of each battery charge. Up until now, all electric forklifts experienced a gradual drop in performance as the charge in the battery was used. Because of this function, the operator can enjoy that vibrant "just charged" performance for 40% longer than on the current model.

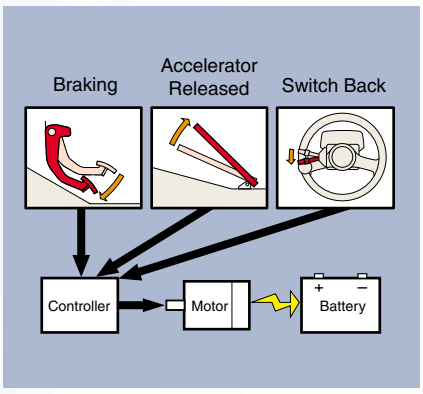

Regenerative System

When the forklift is coasting, the motors are used as generators to charge the battery. This regenerative system operates to help charge the battery when the accelerator is released, when the brake is depressed or during switchback. This system also helps slow the forklift naturally when the accelerator is released. Moreover, it will also help hold the forklift's position when starting on a ramp.

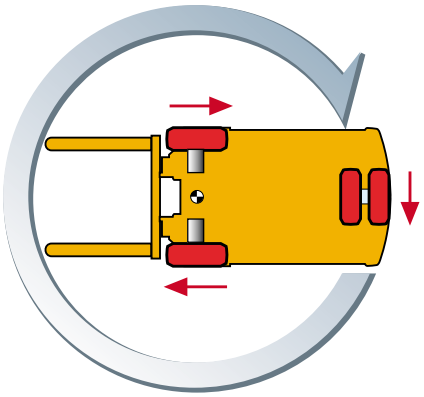

Sharp Pivot Turn

During sharp turns, the direction of each of the front AC drive Motors reverses, allowing the three-wheeler to make pivot turns. This system makes sure the operator can utilize all the incredible maneuverability offered by the three-wheel design.

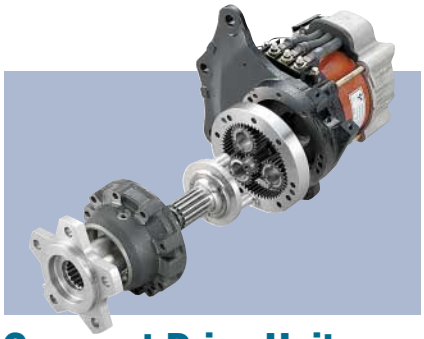

Compact Drive Unit

The use of a planetary gears and the small size of the AC motor combine to offer a compact drive unit. This arrangement also efficiently conveys the power that gives the 7FBE its amazing travel performance.

Total Comfort

The New 7FBE provides the operator with the comfort and convenience needed to get more work done with less effort.

SAS

AC Power System

WORLD LEADER

System of Active Stability(SAS)

The innovative System of Active Stability was developed exclusively by Toyota. It enhances comfort by helping the operator maintain stability when handling heavy loads at high mast heights. It also has features that help the operator control the forklift with less stress and more efficiency. The result is a whole new level of comfort. The first time you operate the 7FBE, you will actually feel the difference these features offer.

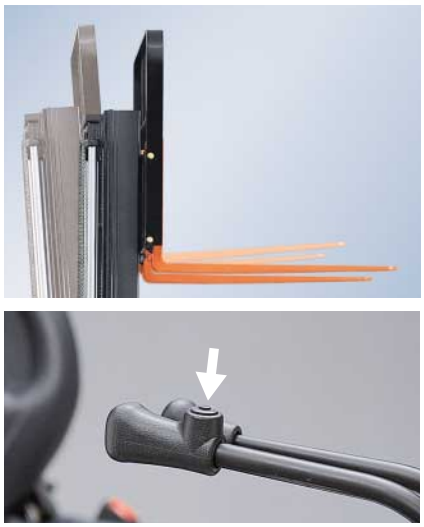

Automatic Fork Leveling Control

Simply press a button when tilting the empty forks forward and they will automatically stop in a level position, ready for insertion into a pallet. This feature can help save a lot of time and frustration during load handling operations.

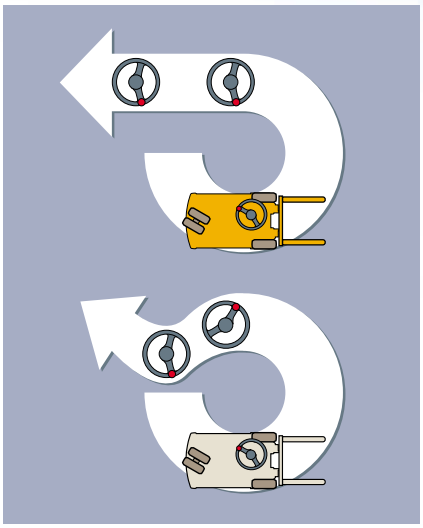

Active Steering Synchronizer

The Active Steering Synchronizer helps to maintain a consistent positional relationship between the steering wheel and the rear steer wheel. This feature enhances maneuverability and also helps to make the operator's job easier and more efficient.

Active Mast Function Controller

Tilt speed and angle control are assisted by Toyota's innovative SAS when heavy loads are being handled at high mast heights. The stable handling provided by this controller contributes to better load handling performance and less operator stress.

Features and equipment
may vary depending on market.

Other Features

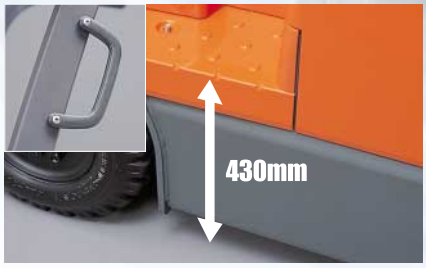

Low Step Height

The 7FBE has a low step along with a convenient assist grip on the front pillar of the overhead guard.
The low step height means less work for the operator when getting on the 7FBE. This is especially important if the operator must get on and off the forklift repeatedly.

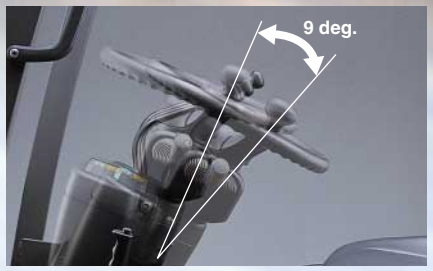

Adjustable Steering Column with Tilt Memory

The steering column can be tilted to the desired driving position.
Tilt memory means that the steering column can be moved out of the way during a battery change and then be returned to its original position without any additional adjustment.

Operator Restraint System (ORS) Seat

The side wings of the seat team up with the emergency locking retractor of the seat belt system to hold the operator in the seat.
The seat can be adjusted to the desired operating position. The seat will provide both comfort and support for long hours of operation.

MODEL VARIATION

MAIN SPECIFICATIONS

Model			7FBE10	7FBE13	7FBE15	7FBE18	7FBE20
Load Capacity		kg	1000	1250	1500	1750	2000
Load Center		mm	500	500	500	500	500
Overall Width	**A**	mm	1075	1075	1075	1075	1075
Turning Radius (Outside)	**B**	mm	1365	1400	1515	1550	1675
Overhead Guard Height	**C**	mm	1980	1980	1980	1980	1980
Length to Fork Face	**D**	mm	1750	1755	1875	1905	2045

BATTERY AND MOTOR SPECIFICATIONS

Model			7FBE10	7FBE13	7FBE15	7FBE18	7FBE20
Voltage/Capacity (5-hour ratings)	STD	V/AH	48/280	48/280	48/390	48/390	48/390
	High	V/AH	48/365	48/365	48/565	48/565	48/645
Electric Motors	Drive	kW x Unit	4.9 x 2	4.9 x 2	4.9 x 2	4.9 x 2	4.9 x 2
	Load Handling	kW	9.2	9.2	9.2	9.2	9.2

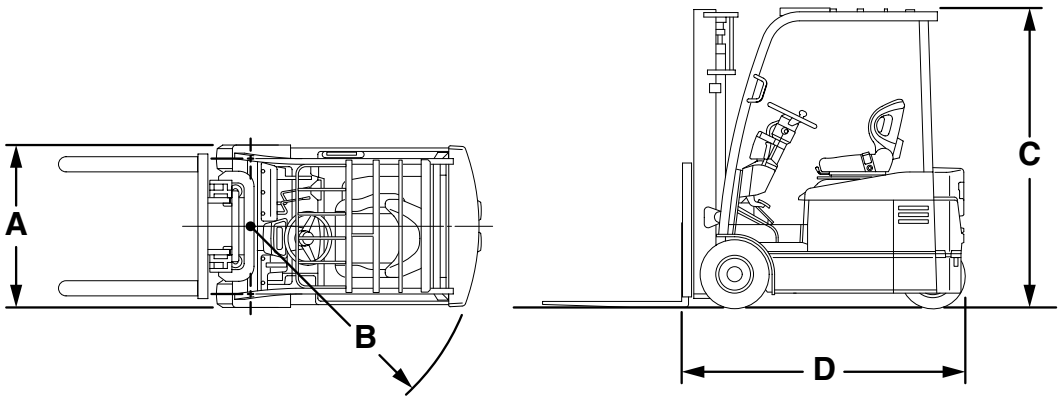

The data in this brochure is determined based on our standard testing condition.
The performance may vary depending on the actual specification and condition of the vehicle as well as the condition of the operating area.
Availability and specifications depend on region and are subject to change without notice.
Due to photography and printing, color of actual vehicle may vary from this brochure. Some photos have been computer-enhanced.
Please consult your Toyota representative for details.

All rights reserved by Toyota Industries Corporation.

TOYOTA INDUSTRIAL EQUIPMENT

TOYOTA MATERIAL HANDLING INTERNATIONAL

CAT.7FBE10-20/E·0807/ⓞ/Printed in Japan/**No.711070E0/2,430**